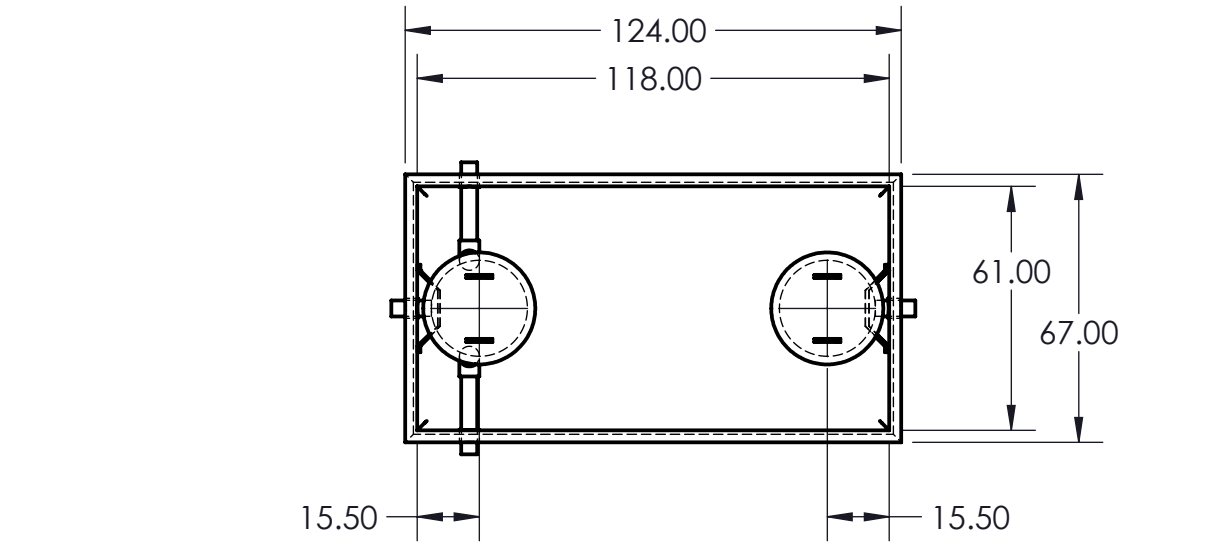

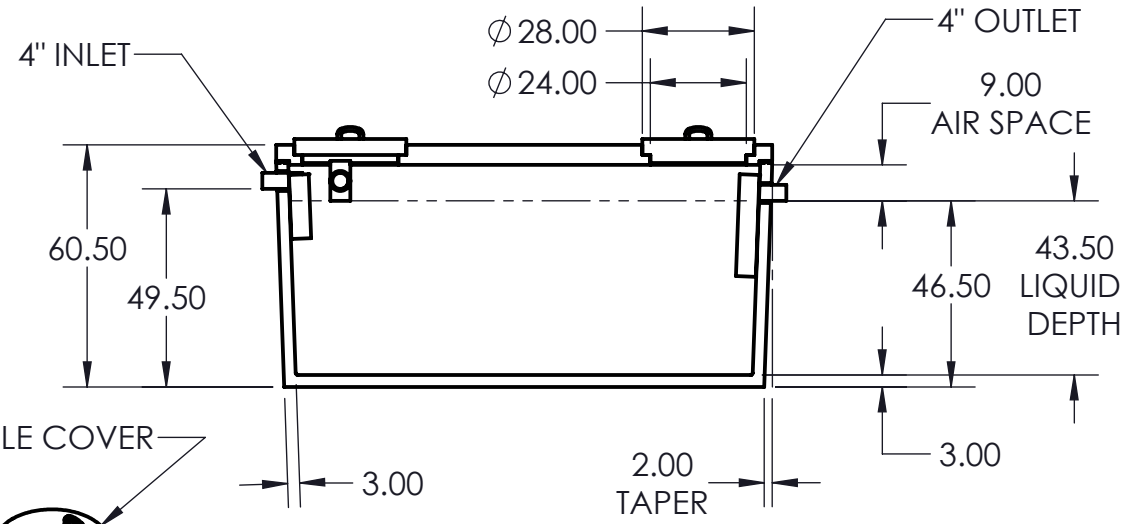

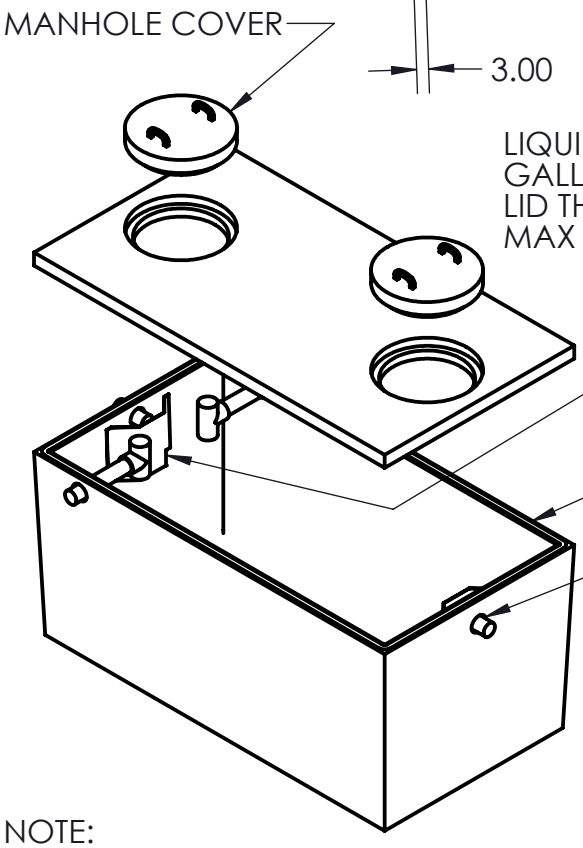

LIQUID CAPACITY TO BOTTOM OF OUTLET: 1359 GALLONS
GALLONS PER INCH: 31.3
LID THICKNESS: 5" WITH 1" RECESS
MAX BURIAL DEPTH: 8'

NOTE:
USE SANITARY T FOR BAFFLE ON SIDE INLETS.
RUN PIPE TO MANHOLE.

Belle Plaine Block & Tile
130 South Ash
Belle Plaine, MN 56011
952-873-2363
952-873-2368 (fax)

1250 GAL 1-CMPT SIDE INLET SEPTIC TANK

Model: 30TNKSI1250
Drawing: DZ-1250 SINGLE
Drawn By: DJP Date: 10/24/2012