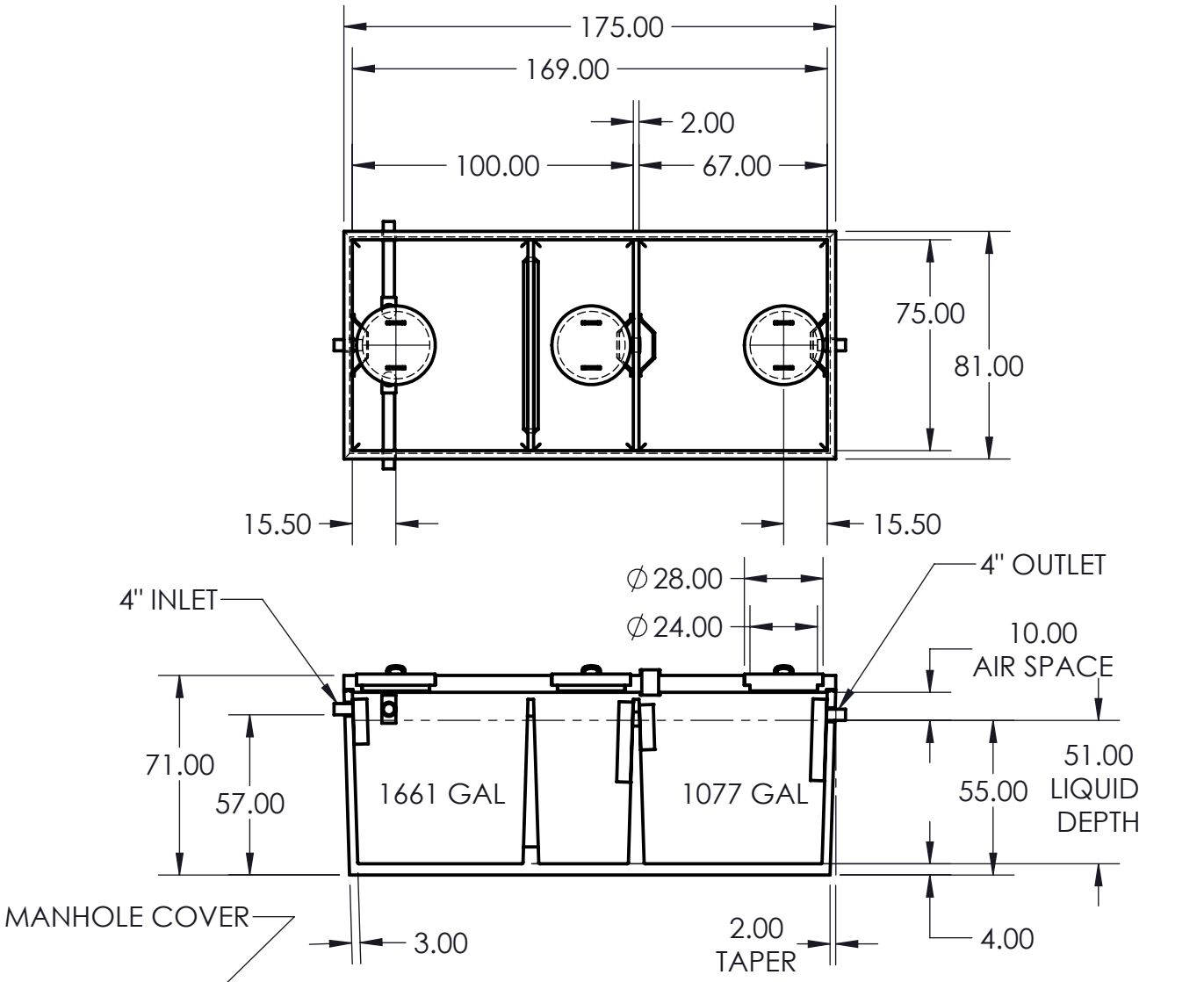


LIQUID CAPACITY TO BOTTOM OF OUTLET: 2738 GALLONS
GALLONS PER INCH: 53.7
LID THICKNESS: 6" WITH 1" RECESS
MAX BURIAL DEPTH: 8'

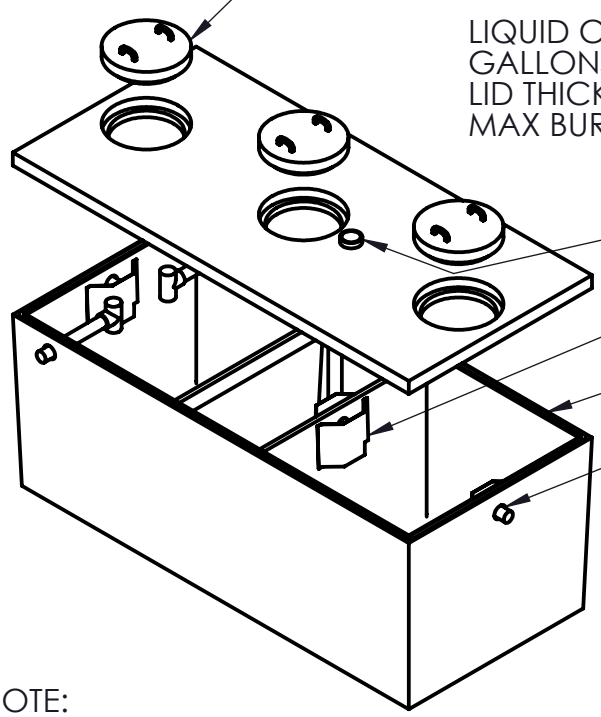


NOTE:
USE SANITARY T FOR BAFFLE ON SIDE INLETS.
RUN PIPE TO MANHOLE.

**Belle Plaine Block & Tile**
130 South Ash
Belle Plaine, MN 56011
952-873-2363
952-873-2368 (fax)

**2500 GAL 2-CMPT SI FILT CAP SEPTIC TANK**
Model: 30TNKSI2500-2 (3 MANHOLE)
Drawing: DZ-2500 2CMP
Drawn By: DJP Date: 10/24/2012