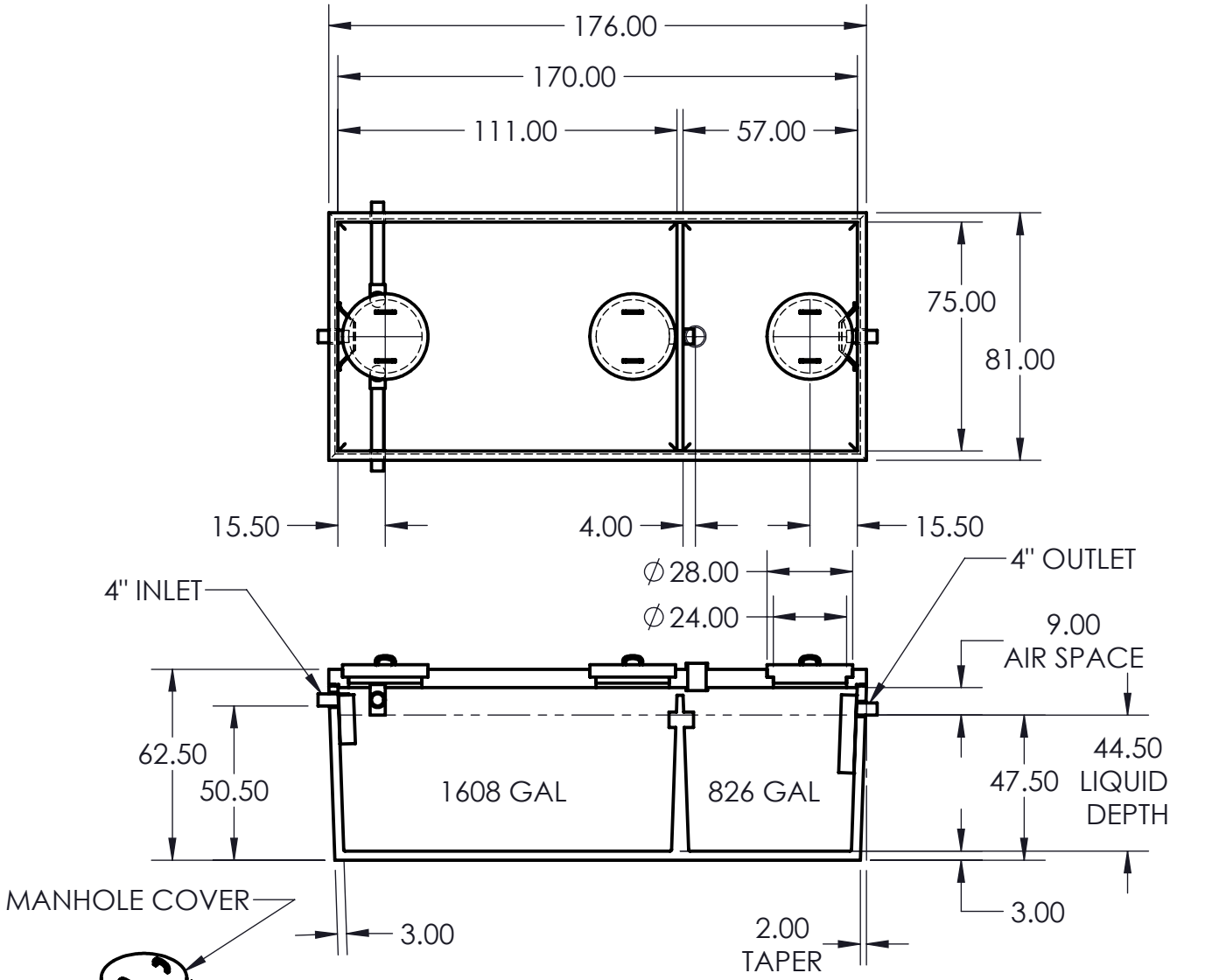

LIQUID CAPACITY TO BOTTOM OF OUTLET: 2434 GALLONS
GALLONS PER INCH: 54.7
LID THICKNESS: 6" WITH 1" RECESS
MAX BURIAL DEPTH: 8'

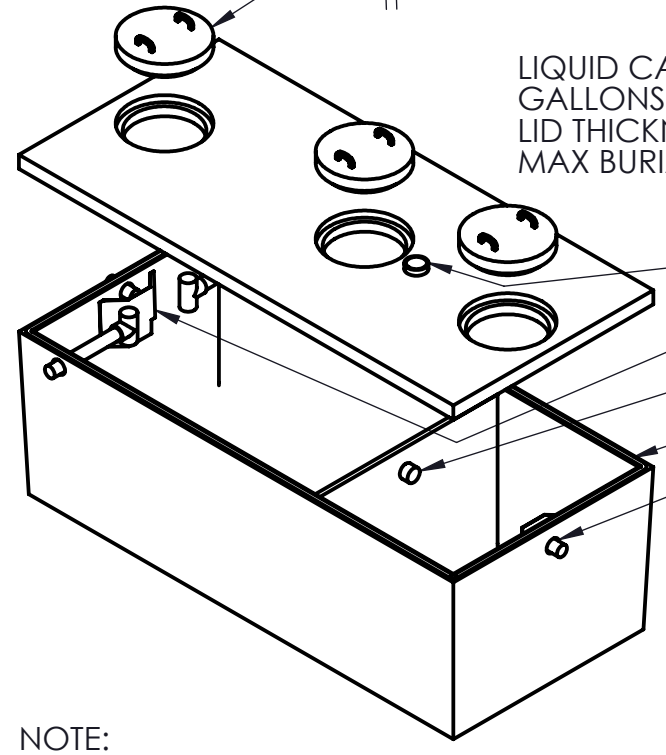

NOTE:
USE SANITARY T FOR BAFFLE ON SIDE INLETS.
RUN PIPE TO MANHOLE.

Belle Plaine Block & Tile
130 South Ash
Belle Plaine, MN 56011
952-873-2363
952-873-2368 (fax)

2250 GAL 2-CMPT FILTER SI SEPTIC TANK
Model: 30TNKFI2250/2 (3 MANHOLE)
Drawing: DZ-2250 2CMP
Drawn By: DJP Date: 10/24/2012